MKP199 Series

200 Watt Medical Desktop Power Supply

PHASIUM BY MEGMEET

Medical Power Specialists

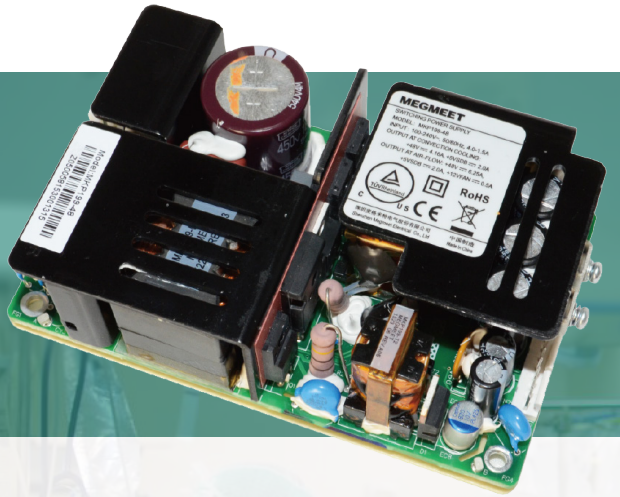

The elite of the 3 X 5 converters. This 200W (300W with airflow) reliable low cost medical and commercial AC/DC power supply features superior EMI/EMC performance driven by an advanced high efficiency PFC + LLC topology. Class I and Class II construction is available.

Key Features

- 60950-1 & Medical 60601-1 Safety Approvals
- Small 5 x 3 x 1.5" Package
- Class I, Class II Construction Compatible
- High Efficiency - 91.5% typical at full load
- EN55011 / EN55022 / FCC Part 15J Class B Emissions
- Medical type BF Rating
- 3 Year Warranty

Oxygen Concentrator

Defibrillator/Monitor

Ventilator

Endoscopy/Laproscopy

PHASIUM BY MEGMEET

POWER@PHASIUMPOWER.COM

PHASIUM BY MEGMEET

MKP199 Series

200 Watt Medical Power Supply

Models	Main Output Voltage	Output Current (convection)	Ripple & Noise (Max)	Max Total Regulation
MKP199C/MKP199M-12	12V	16.7A	120mV	±3%
MKP199C/MP199M-19	19V	10.5A	190mV	±3%
MKP199C/MKP199M-24	24V	8.3A	240mV	±3%
MKP199C/MKP199M-28	28V	7.1A	280mV	±3%
MKP199C/MKP199M-48	48V	4.2A	480mV	±3%

Naming rules: MKP199-XX-abc; MKP199 series name; XX=output voltage; a=A for class I, B for class II; bc for customer product or not use.

Technical Highlights

Input Voltage	85-264 VAC (Universal)	**Efficiency**	91%min at 115VAC/230VAC, full load
Leakage Current	<100μA @ 264VAC	**Operating Temperature**	0°C ~ +40°C
Output Voltage	See Table	**Protection**	Internal T5.0A / 250V Fuse (Line & Neutral)
Line Regulation	±0.5%	**Isolation**	Input to Output: 4000 VAC, 2xMOPP Input to Ground (Class I): 1500 VAC, 1xMOPP Output to Ground (Class I):1500 VAC, 1xMOPP
Load Regulation	±2%	**MTBF**	300K Hours, Mil-217F at 25 °C, full load

RoHS COMPLIANT

Note: Product specifications are subject to change without prior notice.

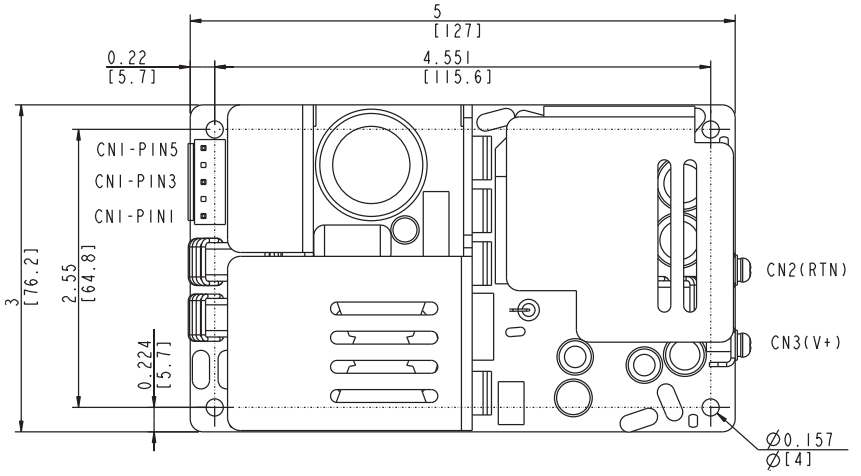

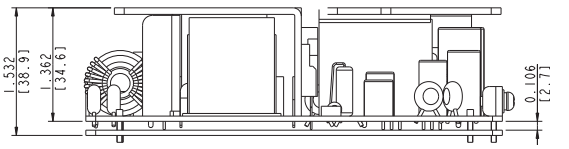

PHASIUM BY MEGMEET www.phasiumpower.com